AC
SUBMERSIBLE PUMP CATALOGUE

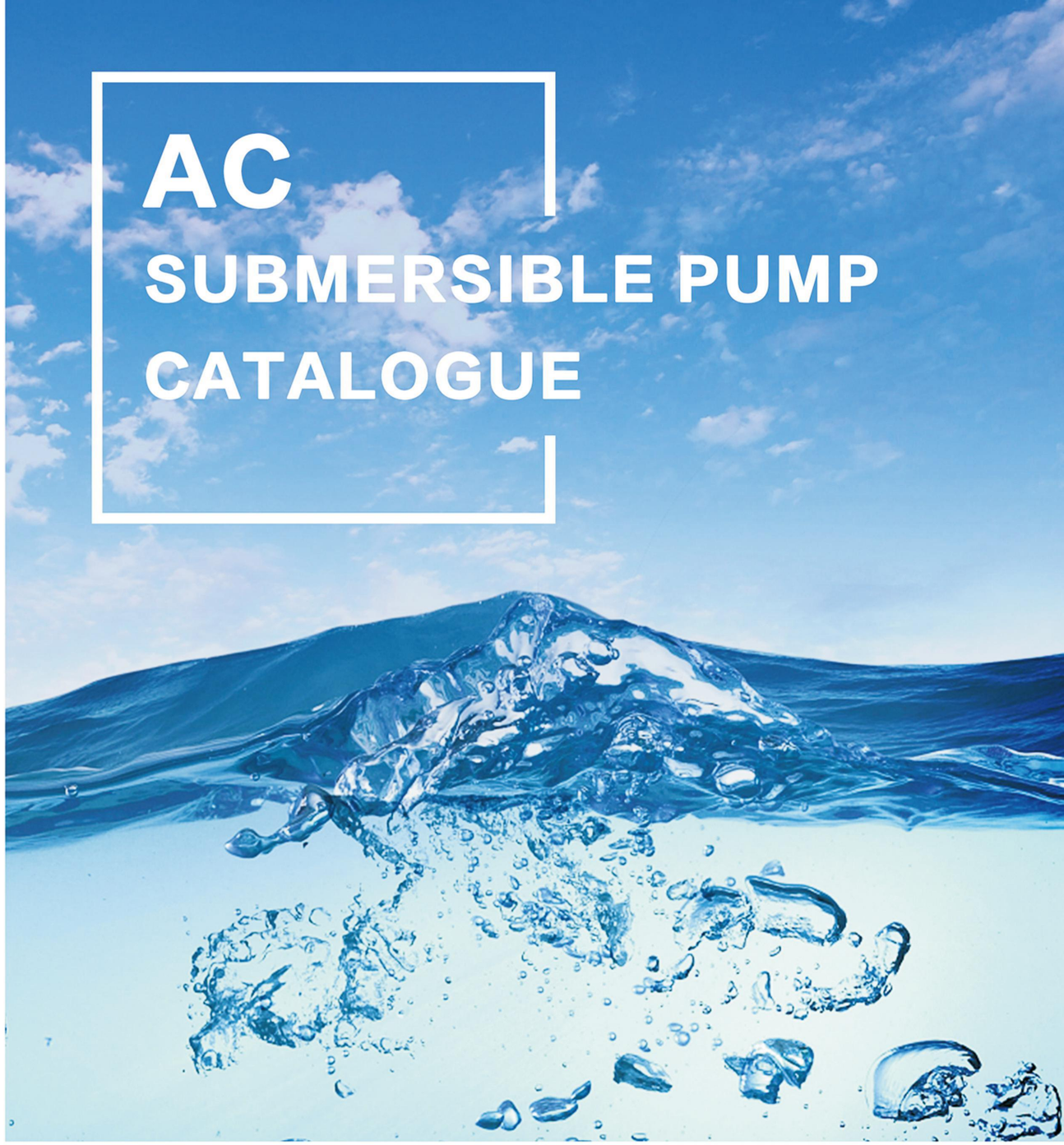

WQ / QW submersible sewage pump

Product description :

WQ series submersible sewage pump is composed of water pump, seal and motor. The motor is located in the upper part and is divided into single–phase and three–phase asynchronous motors. Used between pump and motor double–end mechanical seal, each fixed end seal is sealed with O–type oil–resistant rubber sealing ring for static sealing. The mechanical seal of key parts adopts cemented carbide and high–quality silicon carbide as material, the shaft is made of 45 # steel or stainless steel, to ensure the shaft has reliable mechanical strength and certain wear resistance and corrosion resistance.

The stator of the high–power sewage pump is embedded with a thermal control switch. Normal temperature is "normally closed" state, when the stator temperature reaches 125℃, the switch opens. A water leakage probe is installed in the oil chamber for water leakage detection. The signal line of the oil and water intake probe is connected.Connect any line to the leakage circuit breaker; when the mechanical seal on the pump side leaks and the oil–water ratio in the oil chamber reaches a certain concentration, the oil–water probe will send an alarm signal and the power supply is cut off and the pump stops working automatically.

Model meaning:

50 WQ 10 – 10 – 0.75

- 0.75 — Power (kW)
- 10 — Rated head (m)
- 10 — Rated flow (m^3/h)
- WQ — Submersible sewage pump
- 50 — Caliber (mm)

Table of performance parameters

No.	Model	Rated flow (m^3/h)	Rated head (m)	Power (kW)	outlet (mm)	Speed (r/min)
1	25WQ5–18–0.75	5	18	0.75	25	2900
2	32WQ6–16–0.75	6	16	0.75	32	2900
3	40WQ7–15–0.75	7	15	0.75	40	2900
4	50WQ10–10–0.75	10	10	0.75	50	2900
5	65WQ15–7–0.75	15	7	0.75	65	2900
6	25WQ8–18–1.1	8	18	1.1	25	2900
7	32WQ12–15–1.1	12	15	1.1	32	2900
8	40WQ7–18–1.1	7	18	1.1	40	2900
9	50WQ9–15–1.1	9	15	1.1	50	2900
10	65WQ15–9–1.1	15	9	1.1	65	2900
11	50WQ15–15–1.5	15	15	1.5	50	2900
12	50WQ20–15–1.5	20	15	1.5	50	2900
13	65WQ25–7–1.5	25	7	1.5	65	2900
14	80WQ40–8–1.5	40	8	1.5	80	2900
15	50WQ15–20–2.2	15	20	2.2	50	2900
16	65WQ20–15–2.2	20	15	2.2	65	2900
17	65WQ25–15–2.2	25	15	2.2	65	2900
18	80WQ40–10–2.2	40	10	2.2	80	2900
19	50WQ15–30–3	15	30	3	50	2900
20	65WQ37–13–3	37	13	3	65	2900
21	80WQ45–12–3	45	12	3	45	2900
22	100WQ60–9–3	60	9	3	60	2900

No.	Model	Rated flow (m^3/h)	Rated head (m)	Power (kW)	outlet (mm)	Speed (r/min)
23	50WQ15–35–4	15	35	4	50	2900
24	50WQ40–15–4	40	15	4	50	2900
25	65WQ20–25–4	20	25	4	65	2900
26	80WQ40–15–4	40	15	4	80	2900
27	100WQ60–12–4	60	12	4	100	2900
28	50WQ20–40–5.5	20	40	5.5	50	2900
29	65WQ25–35–5.5	25	35	5.5	65	2900
30	80WQ30–30–5.5	30	30	5.5	80	2900
31	100WQ65–18–5.5	65	18	5.5	100	2900
32	50WQ20–45–7.5	20	45	7.5	50	2900
33	65WQ30–40–7.5	30	40	7.5	65	2900
34	65WQ40–30–7.5	40	30	7.5	65	2900
35	80WQ65–25–7.5	65	25	7.5	80	2900
36	100WQ80–15–7.5	80	15	7.5	100	2900
37	150WQ100–15–7.5	100	15	7.5	150	2900
38	50WQ20–60–11	20	60	11	50	2900
39	65WQ30–50–11	30	50	11	65	2900
40	80WQ40–40–11	40	40	11	80	2900
41	100WQ80–25–11	80	25	11	100	2900
42	150WQ150–12–11	150	12	11	150	2900
43	200WQ200–9–11	200	9	11	200	2900
44	50WQ30–60–15	30	60	15	50	2900

Table of performance parameters

No.	Model	Rated flow (m^3/h)	Rated head (m)	Power (kW)	outlet (mm)	Speed (r/min)
45	65WQ35-55-15	35	55	15	65	2900
46	80WQ45-52-15	45	52	15	80	2900
47	100WQ60-45-15	60	45	15	100	2900
48	150WQ150-20-15	150	20	15	150	2900
49	200WQ250-11-15	250	11	15	200	2900
50	50WQ20-80-18.5	20	80	18.5	50	2900
51	65WQ30-68-18.5	30	68	18.5	65	2900
52	80WQ60-45-18.5	60	45	18.5	80	2900
53	100WQ80-40-18.5	80	40	18.5	100	2900
54	150WQ100-36-18.5	100	36	18.5	150	2900
55	200WQ180-18-18.5	180	18	18.5	200	2900
56	50WQ20-90-22	20	90	22	50	2900
57	65WQ30-75-22	30	75	22	65	2900
58	80WQ60-50-22	60	50	22	80	2900
59	100WQ80-45-22	80	45	22	100	2900
60	150WQ100-40-22	100	40	22	150	2900
61	200WQ200-20-22	200	20	22	200	2900
62	100WQ110-10-5.5	110	10	5.5	100	1450
63	150WQ140-7-5.5	140	7	5.5	150	1450
64	100WQ100-15-7.5	100	15	7.5	100	1450
65	150WQ145-9-7.5	145	9	7.5	150	1450
66	100WQ100-25-11	100	25	11	100	1450
67	150WQ130-15-11	130	15	11	150	1450
68	200WQ300-7-11	300	7	11	200	1450
69	250WQ400-5-11	400	5	11	250	1450
70	100WQ100-30-15	100	30	15	100	1450
71	150WQ180-15-15	180	15	15	150	1450
72	200WQ220-12-15	220	12	15	200	1450
73	250WQ500-5-15	500	5	15	250	1450
74	100WQ100-35-18.5	100	35	18.5	100	1450
75	150WQ180-20-18.5	180	20	18.5	150	1450
76	200WQ250-15-18.5	250	15	18.5	200	1450
77	250WQ400-7-18.5	400	7	18.5	250	1450
78	300WQ650-5-18.5	650	5	18.5	300	1450
79	100WQ100-40-22	100	40	22	100	1450
80	150WQ200-22-22	200	22	22	150	1450
81	150WQ180-25-22	180	25	22	150	1450
82	200WQ300-15-22	300	15	22	200	1450
83	200WQ400-10-22	400	10	22	200	1450
84	250WQ500-7-22	500	7	22	250	1450

No.	Model	Rated flow (m^3/h)	Rated head (m)	Power (kW)	outlet (mm)	Speed (r/min)
85	300WQ650-7-22	650	7	22	300	1450
86	100WQ120-45-30	120	45	30	100	1450
87	150WQ180-30-30	180	30	30	150	1450
88	150WQ250-22-30	250	22	30	150	1450
89	200WQ400-13-30	400	13	30	200	1450
90	250WQ600-9-30	600	9	30	250	1450
91	300WQ800-7-30	800	7	30	300	1450
92	100WQ120-50-37	120	50	37	100	1450
93	150WQ200-30-37	200	30	37	150	1450
94	200WQ350-25-37	350	25	37	200	1450
95	250WQ600-12-37	600	12	37	250	1450
96	300WQ800-10-37	800	10	37	300	1450
97	350WQ1000-6-37	1000	6	37	350	1450
98	350WQ1100-6-37	1100	6	37	350	980
99	400WQ1300-6-37	1300	6	37	400	980
100	100WQ100-57-45	100	57	45	100	1450
101	150WQ200-35-45	200	35	45	150	1450
102	200WQ300-32-45	300	32	45	200	1450
103	200WQ400-25-45	400	25	45	200	1450
104	250WQ600-15-45	600	15	45	250	1450
105	300WQ800-12-45	800	12	45	300	1450
106	350WQ1200-8-45	1200	8	45	350	1450
107	350WQ1300-8-45	1300	8	45	350	980
108	400WQ1700-6-45	1700	6	45	400	980
109	100WQ100-65-55	100	65	55	100	1450
110	150WQ200-50-55	200	50	55	150	1450
111	200WQ400-30-55	400	30	55	200	1450
112	200WQ300-40-55	300	40	55	200	1450
113	250WQ600-20-55	600	20	55	250	1450
114	300WQ800-15-55	800	15	55	300	1450
115	350WQ1000-10-55	1000	10	55	350	1450
116	350WQ1100-10-55	1100	10	55	350	980
117	400WQ1500-8-55	1500	8	55	400	980
118	500WQ2200-5-55	2200	5	55	500	980
119	100WQ120-75-75	120	75	75	100	1450
120	150WQ200-57-75	200	57	75	150	1450
121	200WQ350-45-75	350	45	75	200	1450
122	250WQ600-25-75	600	25	75	250	1450
123	300WQ800-20-75	800	20	75	300	1450
124	350WQ1000-15-75	1000	15	75	350	1450

WQ / QW submersible sewage pump

Table of performance parameters

No.	Model	Rated flow (m^3/h)	Rated head (m)	Power (kW)	outlet (mm)	Speed (r/min)
125	350WQ1500-12-75	1500	12	75	350	980
126	400WQ1700-10-75	1700	10	75	400	980
127	500WQ2000-8-75	2000	8	75	500	980
128	100WQ120-85-90	120	85	90	100	1450
129	150WQ200-65-90	200	65	90	150	1450
130	200WQ300-55-90	300	55	90	200	1450
131	250WQ600-30-90	600	30	90	250	1450
132	300WQ800-25-90	800	25	90	300	1450
133	350WQ1000-18-90	1000	18	90	350	1450
134	350WQ1200-18-90	1200	18	90	350	980
135	400WQ1500-15-90	1500	15	90	400	980
136	500WQ2000-10-90	2000	10	90	500	980
137	100WQ100-100-110	100	100	110	100	1450
138	150WQ180-80-110	180	80	110	150	1450
139	200WQ300-65-110	300	65	110	200	1450
140	250WQ600-35-110	600	35	110	250	1450
141	300WQ1000-25-110	1000	25	110	300	1450
142	350WQ1300-20-110	1300	20	110	350	1450
143	350WQ1600-16-110	1600	16	110	350	980
144	400WQ1800-15-110	1800	15	110	400	980
145	500WQ2500-10-110	2500	10	110	500	980
146	150WQ200-90-132	200	90	132	150	1450
147	200WQ400-75-132	400	75	132	200	1450
148	250WQ600-40-132	600	40	132	250	1450
149	300WQ800-36-132	800	36	132	300	1450
150	350WQ1100-28-132	1100	28	132	350	1450
151	400WQ1700-16-132	1700	16	132	400	1450
152	400WQ2000-15-132	2000	15	132	400	980
153	500WQ2800-10-132	2800	10	132	500	980
154	500WQ3100-10-132	3100	10	132	500	740
155	600WQ3700-8-132	3700	8	132	600	980
156	600WQ4000-8-132	4000	8	132	600	740
157	150WQ220-100-160	220	100	160	150	1450
158	200WQ400-85-160	400	85	160	200	1450
159	250WQ600-60-160	600	60	160	250	1450
160	300WQ800-40-160	800	40	160	300	1450
161	350WQ1000-35-160	1000	35	160	350	1450
162	400WQ1600-22-160	1600	22	160	400	1450
163	400WQ2000-18-160	2000	18	160	400	980
164	500WQ2300-16-160	2300	16	160	500	1450

No.	Model	Rated flow (m^3/h)	Rated head (m)	Power (kW)	outlet (mm)	Speed (r/min)
165	500WQ2600-16-160	2600	16	160	500	980
166	500WQ3000-14-160	3000	14	160	500	740
167	600WQ3700-10-160	3700	10	160	600	980
168	600WQ4000-10-160	4000	10	160	600	740
169	150WQ200-110-185	200	110	185	150	1450
170	200WQ400-90-185	400	90	185	200	1450
171	250WQ600-70-185	600	70	185	250	1450
172	300WQ900-40-185	900	40	185	300	1450
173	350WQ1100-38-185	1100	38	185	350	1450
174	400WQ1600-25-185	1600	25	185	400	1450
175	400WQ2000-20-185	2000	20	185	400	980
176	500WQ2200-18-185	2200	18	185	500	1450
177	500WQ3000-15-185	3000	15	185	500	980
178	500WQ3200-15-185	3200	15	185	500	740
179	600WQ3700-12-185	3700	12	185	600	980
180	600WQ4000-12-185	4000	12	185	600	740
181	250WQ700-75-200	700	75	200	250	1450
182	300WQ1000-45-200	1000	45	200	300	1450
183	350WQ1300-35-200	1300	35	200	350	1450
184	400WQ1600-30-200	1600	30	200	400	1450
185	400WQ2300-22-200	2300	22	200	400	980
186	500WQ2500-20-200	2500	20	200	500	1450
187	500WQ3500-15-200	3500	15	200	500	980
188	600WQ4500-12-200	4500	12	200	600	980
189	300WQ1100-45-250	1100	45	250	300	1450
190	350WQ1500-36-250	1500	36	250	350	1450
191	400WQ1800-30-250	1800	30	250	400	1450
192	400WQ2200-28-250	2200	28	250	400	980
193	500WQ3000-21-250	3000	21	250	500	980
194	600WQ4000-18-250	4000	18	250	600	980
195	300WQ1000-55-315	1000	55	315	300	1450
196	350WQ1500-45-315	1500	45	315	350	1450
197	400WQ2000-36-315	2000	36	315	400	1450
198	500WQ3500-25-315	3500	25	315	500	980
199	600WQ4500-20-315	4500	20	315	600	980
200	500WQ3000-35-400	3000	35	400	500	980
201	600WQ5000-22-400	5000	22	400	600	980
202	500WQ4000-32-550	4000	32	550	500	980
203	600WQ5500-25-550	5500	25	550	600	980

Application:

1. Boiler water transportation.
2. Drainage in hotel laundry room.
3. Hot water delivery in power plants and steel plants.

Conditions of Use:

1. The temperature of the medium does not exceed 120℃, and the density is 1.0–1.3kg/m³.
2. The exposed liquid level of the motor part does not exceed 1/2.
3. The pump must be used within the head range to ensure that the motor is not overloaded.

Model meaning:

50 WQR 10–10–0.75

- Power (kW)
- Rated head (m)
- Rated flow (m³/h)
- High temperature resistant sewage pump
- Caliber (mm)

Application :

1. High temperature resistant motor.
2. High temperature resistant good quality bearings and high temperature resistant mechanical seals.
3. High temperature resistant O–ring and high temperature resistant cable.
4. This pump casing is made of

Table of performance parameters

No.	Model	Rated flow (m³/h)	Rated head (m)	Power (kW)	outlet (mm)	voltage (V)	Speed (r/min)
1	25WQR5–18–0.75	5	18	0.75	25	220	2900
2	32WQR6–16–0.75	6	16	0.75	32	220	2900
3	40WQR7–15–0.75	7	15	0.75	40	220	2900
4	50WQR10–10–0.75	10	10	0.75	50	220	2900
5	40WQR7–18–1.1	7	18	1.1	40	220	2900
6	50WQR9–15–1.1	9	15	1.1	50	220	2900
7	65WQR15–9–1.1	15	9	1.1	65	220	2900
8	50WQR15–15–1.5	15	15	1.5	50	220	2900
9	65WQR25–7–1.5	25	7	1.5	65	220	2900
10	80WQR40–8–1.5	40	8	1.5	80	220	2900
11	50WQR15–20–2.2	15	20	2.2	50	220	2900
12	65WQR20–15–2.2	20	15	2.2	65	220	2900
13	80WQR40–10–2.2	40	10	2.2	80	220	2900
14	100WQR50–7–2.2	50	7	2.2	100	220	2900
15	50WQR15–30–3	15	30	3	50	220	2900
16	65WQR37–13–3	37	13	3	65	220	2900
17	80WQR45–12–3	45	12	3	80	220	2900
18	100WQR60–9–3	60	9	3	100	220	2900
19	50WQR15–35–4	15	35	4	50	220	2900
20	65WQR20–25–4	20	25	4	65	220	2900

WQR high temperature resistant sewage pump

Table of performance parameters

No.	Model	Rated flow (m³/h)	Rated head (m)	Power (kW)	outlet (mm)	Speed (r/min)
21	80WQR40–15–4	40	15	4	80	2900
22	100WQR60–12–4	60	12	4	100	2900
23	50WQR20–40–5.5	20	40	5.5	50	2900
24	65WQR25–35–5.5	25	35	5.5	65	2900
25	80WQR30–30–5.5	30	30	5.5	80	2900
26	100WQR65–18–5.5	65	18	5.5	100	2900
27	150WQR100–10–5.5	100	10	5.5	150	2900
28	50WQR20–50–7.5	20	50	7.5	50	2900
29	65WQR30–40–7.5	30	40	7.5	65	2900
30	65WQR40–30–7.5	40	30	7.5	65	2900
31	80WQR65–25–7.5	65	25	7.5	80	2900
32	100WQR80–15–7.5	80	15	7.5	100	100
33	150WQR100–15–7.5	100	15	7.5	150	2900
34	200WQR250–6–7.5	250	6	7.5	200	1450
35	50WQR20–60–11	20	60	11	50	2900
36	65WQR30–50–11	30	50	11	65	2900
37	80WQR40–40–11	40	40	11	80	2900
38	100WQR80–25–11	80	25	11	100	2900
39	100WQR100–25–11	1000	25	11	100	1450
40	150WQR150–12–11	150	12	11	150	2900
41	150WQR130–15–11	130	15	11	150	1450
42	200WQR200–9–11	200	9	11	200	2900
43	200WQR300–7–11	300	7	11	200	1450
44	50WQR30–60–15	30	60	15	50	2900
45	65WQR35–55–15	35	55	15	65	2900
46	80WQR45–52–15	45	52	15	80	2900
47	100WQR60–45–15	60	45	15	100	2900
48	100WQR100–30–15	100	30	15	100	1450
49	150WQR150–20–15	150	20	15	150	2900
50	150WQR180–15–15	180	15	15	150	1450

No.	Model	Rated flow (m³/h)	Rated head (m)	Power (kW)	outlet (mm)	Speed (r/min)
51	200WQR250–11–15	250	11	15	200	2900
52	200WQR200–12–15	200	12	15	200	1450
53	100WQR100–35–18.5	100	35	18.5	100	1450
54	150WQR180–20–18.5	180	20	18.5	150	1450
55	200WQR250–15–18.5	250	15	18.5	200	1450
56	250WQR400–7–18.5	400	7	18.5	250	1450
57	100WQR100–40–22	100	40	22	100	1450
58	150WQR200–22–22	200	22	22	150	1450
59	150WQR180–25–22	180	25	22	150	1450
60	200WQR300–15–22	300	15	22	200	1450
61	200WQR400–10–22	400	10	22	200	1450
62	250WQR500–7–22	500	7	22	250	1450
63	100WQR120–45–30	120	45	30	100	1450
64	150WQR180–30–30	180	30	30	150	1450
65	150WQR250–22–30	250	22	30	150	1450
66	200WQR400–13–30	400	13	30	200	1450
67	250WQR600–9–30	600	9	30	250	1450
68	300WQR800–7–30	800	7	30	300	1450
69	100WQR120–50–37	120	50	37	100	1450
70	150WQR200–30–37	200	30	37	150	1450
71	200WQR350–25–37	350	25	37	200	1450
72	250WQR600–12–37	600	12	37	250	1450
73	300WQR800–10–37	800	10	37	300	1450
74	350WQR1000–6–37	1000	6	37	350	1450
75	100WQR100–57–45	100	57	45	100	1450
76	150WQR200–35–45	200	35	45	150	1450
77	200WQR400–25–45	400	25	45	200	1450
78	250WQR600–15–45	600	15	45	250	1450
79	300WQR800–12–45	800	12	45	300	1450
80	350WQR1200–8–45	1200	8	45	350	1450

WQD series small sewage pump

Application :

Due to its small size and light weight, this series of electric pumps are especially suitable for underground pumping in rural areas, farmland drainage, garden irrigation, household domestic water, and can also be used to exclude industrial water accumulation, building construction water supply and drainage, breeding and other places.

Table of performance parameters

No.	Model	Rated flow (m^3/h)	Rated head (m)	Power (kW)	outlet (mm)	voltage (V)	Speed (r/min)
1	50WQD10-8-0.75	10	8	0.75	50	220/380	2900
2	50WQD10-10-1.1	10	10	1.1	50	220/380	2900
3	50WQD12-20-1.5	12	20	1.5	50	220/380	2900
4	50WQD12-24-1.85	12	24	1.85	50	220/380	2900
5	40WQD5-5-0.37	5	5	0.37	40	220/380	2900
6	40WQD5-6-0.55	5	6	0.55	40	220/380	2900
7	50WQD6.8-10-0.75	6.8	10	0.75	50	220/380	2900
8	50WQD8-12-1.1	8	12	1.1	50	220/380	2900
9	50WQD13-13-1.5	13	13	1.5	50	220/380	2900

QDX/QX submersible electric pump series

Product description :

QDX and QX submersible electric pumps are single-phase or three-phase asynchronous motor. The pump is located on the lower part of the motor. It is a centrifugal impeller and volute structure. The dynamic seal between the water pump and the motor is adopted. Double end mechanical seal. The static seal at each fixed end is made of oil-resistant rubber "O" type seal ring. Due to its small size and light weight, this series of electric pumps are suitable for underground rural water pumping, farmland irrigation, garden irrigation, household domestic water use, and can also be used to exclude industrial water accumulation, water supply and drainage in building construction, and breeding industries.The difference between QDX pumps and WQD pumps is that QDX series is suitable for pumping water with little or without particles rather than water with much sand.

Table of performance parameters

No.	Model	Rated flow (m^3/h)	Rated head (m)	Power (kW)	outlet (mm)	voltage (V)	Speed (r/min)
1	25QDX1.5-10-0.37	1.5	10	0.37	25	220	2900
2	25QDX1.5-13-0.55	1.5	13	0.55	25	220	2900
3	25QDX2-20-0.75	2	20	0.75	25	220/380	2900
4	25QDX2.5-24-1.1	2.5	24	1.1	25	220/380	2900
5	25QDX3-28-1.5	3	28	1.5	25	220/380	2900
6	25QDX1.5-10-0.37	1.5	10	0.37	25	220/380	2900
7	25QDX1.5-13-0.55	1.5	13	0.55	25	220/380	2900
8	25QDX2-20-0.75	2	20	0.75	25	220/380	2900
9	50QDX6-10-0.75	6	10	0.75	50	220/380	2900
10	25QDX3-28-1.5	3	28	1.5	25	220/380	2900
11	50QDX10-15-1.5	10	15	1.5	50	220/380	2900

WQX high-lift sewage pump

Product description :

WQX high-lift sewage pump consists of three parts: water pump, seal and motor. The motor is located on the upper part of the electric pump and is divided into single-phase and three-phase asynchronous motors. The water pump is located under the motor and is a centrifugal impeller and volute structure, a double-end mechanical seal is used between the pump and the motor, and each fixed end seal is sealed with a "0" oil-resistant rubber seal ring for static sealing.

Application :

Pumps are especially suitable for underground pumping in rural areas, farmland drainage, garden irrigation, mine drainage, and can also be used to exclude industrial water accumulation,building construction water supply and drainage.

Conditions of Use

WQX pump should be able to work continuously and normally under the following conditions of us

1. The working medium is non-corrosive clean water(unlesse: customized stainless steel type), the volume ratio of the sand content in the medium does not exceed 0.10%, and the particle size is not more than 2mm.
2. The temperature of the medium does not exceed 50 degrees Celsius, and the PH value of the medium is between 6.5-8.5(unless customized stainless steel type).
3. WQX pump should be used within the usage range near the prescribed head.
4. WQX pump should be completely immersed in water, and the deepest diving depth should not exceed 10m. pump is more than 0.5m away from the bottom of the water, but it should not fall into the mud.
5. The power frequency is 50HZ, the single-phase voltage cis 220V, the three-phase is 380V, and the voltage flutuation range is 0.9-1.1 times of the rated value(if you want to customized other different voltage and frequency ,kindly contact with our sales).

Model meaning:

WQX 10 - 34 - 2.2

- Power (kW)
- Rated head(m)
- Rated flow (m^3/h)
- Sewage pump

Table of performance parameters

No.	Model	Rated flow (m^3/h)	Rated head (m)	Power (kW)	outlet (mm)	voltage (V)	Speed (r/min)
1	50WQX6-25-1.1	6	25	1.1	50	380	2900
2	50WQX8-28-1.5	8	28	1.5	50	380	2900
3	50WQX10-34-2.2	10	34	2.2	50	380	2900
4	50WQX10-44-3	10	44	3	50	380	2900
5	50WQX15-45-4	15	45	4	50	380	2900
6	50WQX15-55-5.5	15	55	5.5	50	380	2900
7	50WQX12-72-7.5	12	72	7.5	50	380	2900

Product description :

WQP stainless steel submersible sewage pump is a whole stainless steel water pump. All parts that can contact with water are stainless steel. The material is three kinds of stainless steel 304 316 316L. The material is authentic and can pass the test. We adopt NSK bearings , silicon carbide to alloy mechanical sea which also corrosion resistance.

Conditions of Use:

1. The medium temperature does not exceed 50° C (common motor) and 120° C (high temperature motor), the density is 1.0–1.3kg/m3, and the PH is between 0~14.
2. The exposed liquid level of the motor part does not exceed .
3. The pump must be used within the lift range to ensure that the motor is not overloaded.

Advantage: Can be customized to: high temperature resistant type or cutting function.

Table of performance parameters

No.	Model	Rated flow (m^3/h)	Rated head (m)	Power (kW)	outlet (mm)	voltage (V)	Speed (r/min)
1	50WQP10-10-0.75	10	10	0.75	50	220	2900
2	65WQP15-6-0.75	15	6	0.75	65	220	2900
3	50WQP7-15-1.1	7	15	1.1	50	220	2900
4	65WQP20-6-1.1	20	6	1.1	65	220	2900
5	50WQP15-15-1.5	15	15	1.5	50	220	2900
6	65WQP25-7-1.5	25	7	1.5	65	220	2900
7	50WQP15-20-2.2	15	20	2.2	50	220	2900
8	65WQP20-15-2.2	20	15	2.2	65	220	2900
9	80WQP45-10-2.2	45	10	2.2	80	220	2900
10	100WQP50-7-2.2	50	7	2.2	100	220	2900
11	50WQP15-30-3	15	30	3	50	220	2900

WQP stainless steel sewage pump

Table of performance parameters

No.	Model	Rated flow (m^3/h)	Rated head (m)	Power (kW)	outlet (mm)	Speed (r/min)
12	65WQP37-13-3	37	13	3	65	2900
13	80WQP45-12-3	45	12	3	80	2900
14	100WQP50-10-3	50	10	3	100	2900
15	50WQP15-32-4	15	32	4	50	2900
16	65WQP20-25-4	20	25	4	65	2900
17	80WQP40-15-4	40	15	4	80	2900
18	100WQP50-10-4	50	10	4	100	1450
19	50WQP15-40-5.5	15	40	5.5	50	2900
20	65WQP25-32-5.5	25	32	5.5	65	2900
21	80WQP30-30-5.5	30	30	5.5	80	2900
22	100WQP65-18-5.5	65	18	5.5	100	2900
23	150WQP100-7-5.5	100	7	5.5	150	2900
24	50WQP20-50-7.5	20	50	7.5	50	2900
25	65WQP40-30-7.5	40	30	7.5	65	2900
26	80WQP65-25-7.5	65	25	7.5	80	2900
27	100WQP80-20-7.5	80	20	7.5	100	2900
28	150WQP100-15-7.5	100	15	7.5	150	2900
29	65WQP35-45-11	35	45	11	65	2900
30	65WQP35-55-15	35	55	15	65	2900
31	100WQP100-20-11	100	20	11	100	1450
32	100WQP100-25-15	100	25	15	100	1450
33	100WQP100-30-18.5	100	30	18.5	100	1450
34	100WQP100-35-22	100	35	22	100	1450
35	150WQP180-12-15	180	12	15	150	1450
36	150WQP180-16-18.5	180	16	18.5	150	1450
37	150WQP180-20-22	180	20	22	150	1450
38	150WQP180-28-30	180	28	30	150	1450
39	150WQP200-30-37	200	30	37	150	1450
40	200WQP300-7-11	300	7	11	200	1450
41	200WQP250-11-15	250	11	15	200	1450
42	200WQP250-15-18.5	250	15	18.5	200	1450
43	200WQP400-10-22	400	10	22	200	1450
44	200WQP400-13-30	400	13	30	200	1450
45	200WQP300-15-22	300	15	22	200	1450
46	200WQP250-22-30	250	22	30	200	1450
47	200WQP350-25-37	350	25	37	200	1450
48	100WQP100-45-37	100	45	37	100	1450
49	150WQP150-40-45	150	40	45	150	1450
50	250WQP460-25-55	460	25	55	250	1450
51	200WQP250-50-75	250	50	75	200	1450

WQD/WQ-S series stainless steel sewage submersible electric pump(threaded outlet)

Product Description :

1. WQ(D)-S series all stainless steel casting sewage pump adopts unique single and double flow channel impeller structure,which greatly improves the ability to pass the dirt.
2. Adopt fluororubber double-end mechanical seal and fluororubber O-ring seal, which can effectively prevent water from entering the motor .
3. Overheat and current protector can be installed in the electric pump to prevent the motor from overheating(as customer' s request).

Application :

It is suitable for buildings, hospitals, residential quarters, municipal engineering, road traffic and construction, factory sewage,aquaculture, pharmaceuticals, beverages, seawater and salt water, solid particles contained in general corrosive media, longfiber waste water, sewage.

Table of performance parameters

No.	Model	Rated flow (m^3/h)	Rated head (m)	Power (kW)	Voltage (V)	outlet (mm)	Speed (r/min)
1	WQ(D)3-7-0.25S	3	7	0.25	220/380	25	2860/2900
2	WQ(D)4-5-0.25S	4	5	0.25	220/380	32	2860/2900
3	WQ(D)7-3-0.25S	7	3	0.25	220/380	40	2860/2900
4	WQ(D)3-9-0.37S	3	9	0.37	220/380	25	2860/2900
5	WQ(D)5-7-0.37S	5	7	0.37	220/380	32	2860/2900
6	WQ(D)7-5-0.37S	7	5	0.37	220/380	40	2860/2900
7	WQ(D)3-12-0.55S	3	12	0.55	220/380	25	2860/2900
8	WQ(D)4-10-0.55S	4	10	0.55	220/380	32	2860/2900
9	WQ(D)7-7-0.55S	7	7	0.55	220/380	40	2860/2900
10	WQ(D)10-9-0.75S	10	9	0.75	220/380	40	2860/2900
11	WQ(D)12-8-0.75S	12	8	0.75	220/380	50	2860/2900
12	WQ(D)15-6-0.75S	15	6	0.75	220/380	65	2860/2900
13	WQ(D)8-15-1.1S	8	15	1.1	220/380	40	2860/2900
14	WQ(D)12-12-1.1S	12	12	1.1	220/380	50	2860/2900
15	WQ(D)20-6-1.1S	20	6	1.1	220/380	65	2860/2900
16	WQ(D)6-18-1.5S	6	18	1.5	220/380	40	2860/2900
17	WQ(D)15-15-1.5S	15	15	1.5	220/380	50	2860/2900
18	WQ(D)25-7-1.5S	25	7	1.5	220/380	65	2860/2900
19	WQ15-20-2.2S	15	20	2.2	380	50	2900
20	WQ25-12-2.2S	25	12	2.2	380	65	2900
21	WQ15-25-3S	15	25	3	380	50	2900
22	WQ25-15-3S	25	15	3	380	65	2900
23	WQ15-34-4S	15	34	4	380	50	2900
24	WQ25-27-4S	25	27	4	380	65	2900

Automatic coupling installation

Installation schematic diagram of coupling device

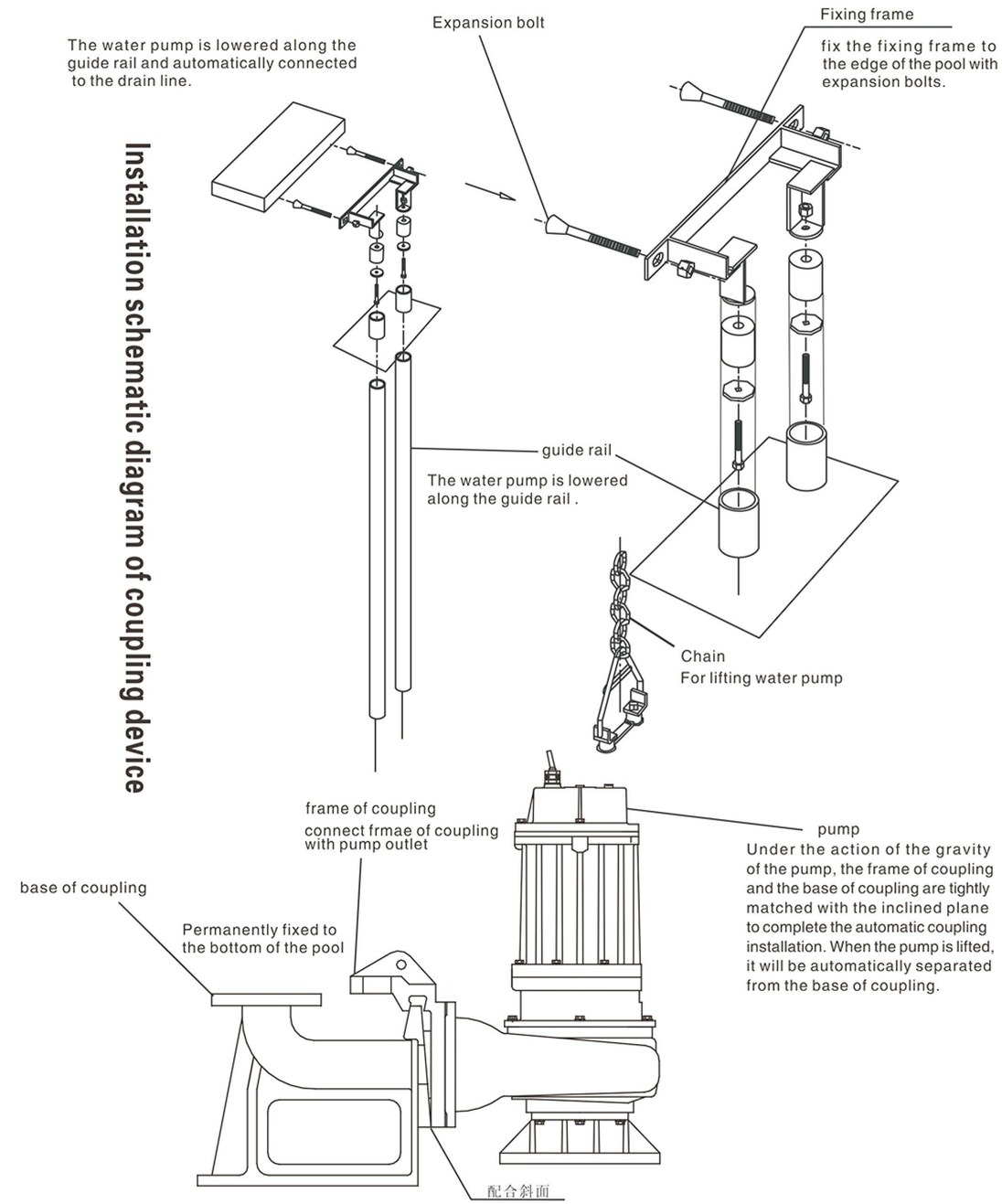

QSP series fountain pump(water filled type)

Conditions of Use :

1. The pump should be fully immersed in water, and the diving depth should be no less than 0.5 meters and no more than 40 meters. The ambient water temperature should not be higher than 40℃.
2. The working medium is non-corrosive clean water, the sand content is not more than 0.1%, and the PH value is 6.5~8.5.
3. The power supply should be three-phase 50 Hz, the rated voltage is 380 volts, and its power supply voltage must be guaranteed in the range of 342 ~ 420 volts.

Table of performance parameters

No.	Model	Flow (m^3/h)	Lift (m)	Power (kW)	outlet (mm)
1	QSP15-10-0.75	15	10	0.75	2
2	QSP10-10-0.55	10	10	0.55	2
3	QSP10-14-0.75	10	14	0.75	2
4	QSP15-7-0.55	15	7	0.55	2
5	QSP15-14-1.1	15	14	1.1	2
6	QSP40-6-1.1	40	6	1.1	3
7	QSP25-9-1.1	25	9	1.1	2.5
8	QSP25-12-1.5	25	12	1.5	2.5
9	QSP40-8-1.5	40	8	1.5	3
10	QSP15-26-2.2	15	26	2.2	2
11	QSP20-20-2.2	20	20	2.2	2
12	QSP25-17-2.2	25	17	2.2	2.5
13	QSP40-13-2.2	4	13	2.2	3
14	QSP65-7-2.2	65	7	2.2	4
15	QSP40-16-3	40	16	3	3
16	QSP40-18-3	40	18	3	3
17	QSP45-16-3	45	16	3	3
18	QSP25-25-3	25	25	3	2.5
19	QSP32-20-3	32	20	3	2.5
20	QSP50-13-3	50	13	3	3

Table of performance parameters

No.	Model	Flow (m^3/h)	Lift (m)	Power (kW)	outlet (mm)
21	QSP65-10-3	65	10	3	4
22	QSP100-6-3	100	6	3	4
23	QSP40-21-4	40	21	4	3
24	QSP40-24-4	40	24	4	3
25	QSP65-13-4	65	13	4	4
26	QSP80-12-4	80	12	4	4
27	QSP100-9-4	100	9	4	4
28	QSP40-28-5.5	40	28	5.5	3
29	QSP45-25-5.5	45	25	5.5	3
30	QSP60-20-5.5	60	20	5.5	4
31	QSP65-18-5.5	65	18	5.5	4
32	QSP100-12-5.5	100	12	5.5	4
33	QSP120-10-5.5	120	10	5.5	6
34	QSP200-8-5.5	200	8	5.5	6
35	QSP220-5-5.5	220	5	5.5	6
36	QSP65-25-7.5	65	25	7.5	4
37	QSP80-20-7.5	80	20	7.5	4
38	QSP100-17-7.5	100	17	7.5	4
39	QSP150-10-7.5	150	10	7.5	6
40	QSP250-8-7.5	250	8	7.5	6
41	QSP120-18-7.5	120	18	7.5	6
42	QSP300-6-7.5	300	6	7.5	6
43	QSP100-15-7.5	100	15	7.5	5
44	QSP20-30/2-3	20	30	3	3
45	QSP25-34/2-4	25	34	4	2.5
46	QSP25-36/2-4	25	36	4	2.5
47	QSP25-38/2-4	25	38	4	2.5
48	QSP20-40/2-4	20	40	4	2.5
49	QSP30-26/2-4	30	26	4	2.5
50	QSP30-30/2-4	30	30	4	2.5
51	QSP15-52/3-4	15	52	4	2
52	QSP40-30/2-5.5	40	30	5.5	3
53	QSP30-45/3-5.5	30	45	5.5	3
54	QSP20-50/3-5.5	20	50	5.5	2.5
55	QSP20-54/3-5.5	20	54	5.5	2.5
56	QSP30-36/2-5.5	30	36	5.5	3
57	QSP25-44/2-5.5	25	44	5.5	2.5
58	QSP15-65/4-5.5	15	65	5.5	2
59	QSP40-40/2-7.5	40	40	7.5	3
60	QSP50-36/3-7.5	50	36	7.5	3
61	QSP80-22/2-7.5	80	22	7.5	4
62	QSP120-18/2-7.5	120	18	7.5	6
63	QSP25-60/3-7.5	25	60	7.5	2.5
64	QSP30-54/3-7.5	30	54	7.5	3
65	QSP20-75/3-7.5	20	75	7.5	2

XWQ reamer cutting sewage pump

0.75-1.1kW

1.5-2.2kW

3-7.5kW

Application range :

1. Sewage discharge from farms and irrigation of rural farmland.
2. Discharge of thin mud in municipal engineering and construction sites.
3. Sewage discharge from hospitals, hotels and high-rise buildings.
4. Instead of carrying people on shoulders, transporting river mud.
5. Discharge of waste water from enterprises.
6. Sewage drainage station in residential area.
7. Subway, basement, civil air defense system drainage station.
8. Supporting exploration mines and water treatment equipment.

Model meaning :

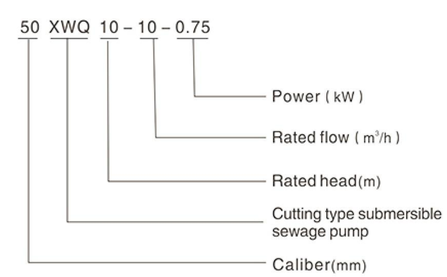

Table of performance parameters

No.	Model	Flow (m^3/h)	Lift (m)	Power (kW)	outlet (mm)	Speed (r/min)
1	50XWQ10-10-0.75	10	10	0.75	50	2900
2	50XWQ12-10-1.1	12	10	1.1	50	2900
3	50XWQ15-15-1.5	15	15	1.5	50	2900
4	65XWQ25-7-1.5	25	7	1.5	65	2900
5	80XWQ40-8-1.5	40	8	1.5	80	2900
6	50XWQ15-20-2.2	15	20	2.2	50	2900
7	65XWQ25-15-2.2	25	15	2.2	65	2900
8	80XWQ45-9-2.2	45	9	2.2	80	2900
9	50XWQ15-22-3	15	22	3	50	2900
10	65XWQ35-15-3	35	15	3	65	2900
11	80XWQ43-13-3	43	13	3	80	2900
12	65XWQ26-22-4	26	22	4	65	2900
13	80XWQ45-17-4	45	17	4	80	2900
14	100XWQ65-12-4	65	12	4	100	2900
15	80XWQ45-20-5.5	45	20	5.5	80	2900
16	100XWQ65-15-5.5	65	15	5.5	100	2900
17	80XWQ45-25-7.5	45	25	7.5	80	2900
18	100XWQ100-15-7.5	100	15	7.5	100	2900
19	150XWQ150-15-11	150	15	11	150	1450
20	150XWQ200-15-15	200	15	15	150	1450
21	150XWQ250-15-18.5	250	15	18.5	150	1450
22	150XWQ300-15-22	300	15	22	150	1450

WQAS cutting sewage pump

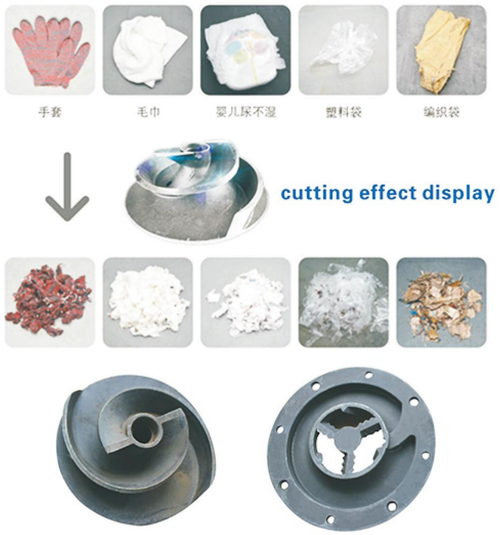

Application :

1. Sewage treatment plant.
2. Subway, basement, civil air defense system drainage station.
3. Waste water discharge from factories, hospitals, residential areas and farms.

Conditions of Use :

1. The temperature of the medium does not exceed 50℃, and the density is 1.0–1.3kg/m3.
2. The water should submerge the pump
3. The pump must be used within the lift range to ensure that the motor is not overloaded.

Model meaning:

50 WQAS 10 – 10 – 0.75

- Power (kw)
- Rated head(m)
- Rated flow (m^3/h)
- New cutting sewage pump
- Caliber(mm)

Table of performance parameters

Model	Flow (m^3/h)	Lift (m)	Power (kW)	outlet (mm)	Speed (r/min)
50ASWQ10–10–0.75	10	10	0.75	50	2900
50ASWQ10–10–0.75/D	10	10	0.75	50	2900
50ASWQ15–9–1.1/D	15	9	1.1	50	2900
50ASWQ15–9–1.1	15	9	1.1	50	2900
50ASWQ10–15–1.5/D	10	15	1.5	50	2900
50ASWQ10–15–1.5	10	15	1.5	50	2900
65ASWQ25–8–1.5	25	8	1.5	65	2900
65ASWQ25–8–1.5/D	25	8	1.5	65	2900
50ASWQ9–22–2.2	9	22	2.2	50	2900
65ASWQ25–15–2.2	25	15	2.2	65	2900
80ASWQ35–10–2.2	35	10	2.2	80	2900
50ASWQ15–22–3	15	22	3	50	2900
65ASWQ25–18–3	25	18	3	65	2900
80ASWQ37–13–3	37	13	3	80	2900
65ASWQ25–21–4	25	21	4	65	2900
80ASWQ40–18–4	40	18	4	80	2900
100ASWQ60–14–4	60	14	4	100	2900
65ASWQ30–25–5.5	30	25	5.5	65	2900
80ASWQ45–20–5.5	45	20	5.5	80	2900
100ASWQ65–18–5.5	65	18	5.5	100	2900
65ASWQ30–30–7.5	30	30	7.5	65	2900
80ASWQ45–25–7.5	45	25	7.5	80	2900
100ASWQ85–17–7.5	85	17	7.5	100	2900

WQAS cutting sewage pump

Table of performance parameters

Model	Flow (m^3/h)	Lift (m)	Power (kW)	outlet (mm)	Speed (r/min)
80ASWQ60–30–11	60	30	11	80	2900/2极
100ASWQ80–25–11	80	25	11	100	2900/2极
150ASWQ100–20–11	100	20	11	150	2900/2极
150ASWQ120–15–11	120	15	11	150	2900/2极
200ASWQ180–11–11	180	11	11	200	2900/2极
80ASWQ60–40–15	60	40	15	80	2900/2极
100ASWQ80–35–15	80	35	15	100	2900/2极
150ASWQ100–30–15	100	30	15	150	2900/2极
150ASWQ120–25–15	120	25	15	150	2900/2极
200ASWQ180–15–15	180	15	15	200	2900/2极
80ASWQ60–45–18.5	60	45	18.5	80	2900/2极
100ASWQ80–40–18.5	80	40	18.5	100	2900/2极
150ASWQ100–36–18.5	100	36	18.5	150	2900/2极
200ASWQ180–18–18.5	180	18	18.5	200	2900/2极
80ASWQ60–50–22	60	50	22	80	2900/2极
100ASWQ80–45–22	80	45	22	100	2900/2极
150ASWQ100–40–22	100	40	22	150	2900/2极
200ASWQ200–20–22	200	20	22	200	2900/2极
80ASWQ80–13–5.5	80	13	5.5	80	1450/4极
100ASWQ110–10–5.5	110	10	5.5	100	1450/4极
150ASWQ150–7–5.5	150	7	5.5	150	1450/4极
80ASWQ80–20–7.5	80	20	7.5	80	1450/4极
100ASWQ100–15–7.5	100	15	7.5	100	1450/4极
150ASWQ145–9–7.5	145	9	7.5	150	1450/4极
200ASWQ250–6–7.5	250	6	7.5	200	1450/4极
80ASWQ100–25–11	100	25	11	80	1450/4极
100ASWQ100–25–11	100	25	11	100	1450/4极
150ASWQ180–11–11	180	11	11	150	1450/4极
200ASWQ300–7–11	300	7	11	200	1450/4极
250ASWQ400–5–11	400	5	11	250	1450/4极
80ASWQ100–30–15	100	30	15	80	1450/4极
100ASWQ100–30–15	100	30	15	100	1450/4极
150ASWQ200–15–15	200	15	15	150	1450/4极
200ASWQ250–11–15	250	11	15	200	1450/4极
250ASWQ500–5–15	500	5	15	250	1450/4极
80ASWQ100–35–18.5	100	35	18.5	80	1450/4极
100ASWQ100–35–18.5	100	35	18.5	100	1450/4极
150ASWQ180–20–18.5	180	20	18.5	150	1450/4极
200ASWQ250–15–18.5	250	15	18.5	200	1450/4极
200ASWQ350–10–18.5	350	10	18.5	200	1450/4极
250ASWQ500–7–18.5	500	7	18.5	250	1450/4极
300ASWQ650–5–18.5	650	5	18.5	300	1450/4极
80ASWQ100–40–22	100	40	22	80	1450/4极

Model	Flow (m^3/h)	Lift (m)	Power (kW)	outlet (mm)	Speed (r/min)
100ASWQ100–40–22	100	40	22	100	1450/4极
150ASWQ200–22–22	200	22	22	150	1450/4极
200ASWQ300–16–22	300	16	22	200	1450/4极
200ASWQ400–10–22	400	10	22	200	1450/4极
250ASWQ500–9–22	500	9	22	250	1450/4极
300ASWQ650–7–22	650	7	22	300	1450/4极
100ASWQ120–45–30	120	45	30	100	1450/4极
150ASWQ180–30–30	180	30	30	150	1450/4极
200ASWQ250–22–30	250	22	30	200	1450/4极
250ASWQ500–12–30	500	12	30	250	1450/4极
250ASWQ600–9–30	600	9	30	250	1450/4极
300ASWQ800–7–30	800	7	30	300	1450/4极
100ASWQ120–50–37	120	50	37	100	1450/4极
150ASWQ200–35–37	200	35	37	150	1450/4极
200ASWQ300–28–37	300	28	37	200	1450/4极
200ASWQ350–25–37	350	25	37	200	1450/4极
250ASWQ600–12–37	600	12	37	250	1450/4极
300ASWQ800–9–37	800	9	37	300	1450/4极
100ASWQ100–57–45	100	57	45	100	1450/4极
150ASWQ200–40–45	200	40	45	150	1450/4极
200ASWQ300–32–45	300	32	45	200	1450/4极
200ASWQ400–25–45	400	25	45	200	1450/4极
250ASWQ600–15–45	600	15	45	250	1450/4极
300ASWQ800–12–45	800	12	45	300	1450/4极
100ASWQ100–65–55	100	65	55	100	1450/4极
150ASWQ180–50–55	180	50	55	150	1450/4极
200ASWQ300–40–55	300	40	55	200	1450/4极
200ASWQ400–30–55	400	30	55	200	1450/4极
250ASWQ600–20–55	600	20	55	250	1450/4极
300ASWQ800–15–55	800	15	55	300	1450/4极
150ASWQ200–60–75	200	60	75	150	1450/4极
200ASWQ350–45–75	350	45	75	200	1450/4极
250ASWQ600–25–75	600	25	75	250	1450/4极
300ASWQ800–20–75	800	20	75	300	1450/4极
150ASWQ200–70–90	200	70	90	150	1450/4极
200ASWQ300–60–90	300	60	90	200	1450/4极
200ASWQ400–50–90	400	50	90	200	1450/4极
250ASWQ600–30–90	600	30	90	250	1450/4极
300ASWQ800–25–90	800	25	90	300	1450/4极
150ASWQ180–80–110	180	80	110	150	1450/4极
200ASWQ300–65–110	300	65	110	200	1450/4极
250ASWQ600–40–110	600	40	110	250	1450/4极
300ASWQ1000–25–110	1000	25	110	300	1450/4极